DESIGN LOADS

CODE BODY: IBC 2006
P_g: 35 PSF
IMPORTANCE FACTOR: 1.0
C_e: 1.0
C_s: 1.0
C_t: 1.1
P_s: 30 PSF
ROOF DEAD LOAD: 10 PSF
CEILING LIVE LOAD: 0 PSF
CEILING DEAD LOAD: 10 PSF
WIND LOAD: 90 MPH
EXPOSURE: C
FLOOR LIVE LOAD: 40 PSF
FLOOR DEAD LOAD T.C.: 10 PSF
FLOOR DEAD LOAD B.C.: 5 PSF

AN EMPLOYEE-OWNED COMPANY

ENERGY PANEL STRUCTURES
102 EAST INDUSTRIAL PARK
GRAETTINGER, IA 51342
PHONE: 712/859-3219
FAX: 712/859-3275
WWW.EPSBUILDINGS.COM

DRAWING INDEX

SHEET	DRAWING INDEX		
S1	COVER PAGE	C1	CONSTRUCTION DETAILS
S2	FOUNDATION PLANVIEW	C2	CONSTRUCTION DETAILS
S3	MAINFLOOR PLANVIEW	C3	CONSTRUCTION DETAILS
S4	2ND FLOOR PLANVIEW	B1	TRUSS INSTALLATION
S5	CROSS SECTION	B3	TRUSS INSTALLATION
S6	CROSS SECTION	B7	TRUSS INSTALLATION
S7	PANEL ELEVATIONS		
S8	PANEL ELEVATIONS		
F1	1ST FLOOR TRUSS LAYOUT		
F2	2ND FLOOR TRUSS LAYOUT		
R1	ROOF TRUSS LAYOUT		

1. SITEWORK: THE SITE SHALL BE GRADED TO PROVIDE DRAINAGE AWAY FROM THE BUILDING.

2. BACK FILL: BACK FILL SHALL CONSIST OF GRAVEL, PEAROCK OR CRUSHED STONE 2 FOOT BACK FROM PANEL/FOUNDATION WALL. GRANULAR BACKFILL TO START AT OR BELOW BOTTOM OF FOOTING & EXTEND VERTICALLY TO WITHIN 8" OF GRADE. COVER GRANULAR MATERIAL W/ ASPHALT OR POLYETHYLENE STRIPS PRIOR TO ADDING 8" OF TOP SOIL. SLOPE AWAY FROM WALL ½" PER FOOT MIN. 6' FROM WALL.

3. CONCRETE WORK: THE CONCRETE WORK SHALL CONSIST OF ALL NECESSARY POUR-IN-PLACE CONCRETE FOOTINGS (OR FOUNDATION) AS PER BUILDING PLANS DESIGNED BY OTHERS THE CONCRETE SHALL MEET A MINIMUM COMPRESSIVE STRENGTH OF 3,500 PSI AT 28 DAYS. ALL CONCRETE SHALL BE DESIGNED IN ACCORDANCE WITH THE AMERICAN CONCRETE INSTITUTE BUILDING CODE REQUIREMENTS FOR STRUCTURAL CONCRETE (ACI 318-05) AND COMMENTARY (ACI 318R-05).

4. WOOD FRAMING: ALL WOOD CONSTRUCTION SHALL BE IN CONFORMANCE WITH THE PROVISIONS OF THE 2005 EDITION OF THE NATIONAL DESIGN SPECIFICATION FOR WOOD CONSTRUCTION. UNLESS NOTED OTHERWISE ALL FRAMING LUMBER SHALL BE SPF#2 GRADE.

5. TRUSSES: WOOD TRUSSES ARE SHOP/PLANT FABRICATED WITH CONNECTOR PLATES PER SPECIFICATIONS. DESIGN CRITERIA ESTABLISHED BY THE TRUSS PLATE INSTITUTE - (ANSI/TPI 1-2002). REFER TO THE BCSI(BUILDING COMPONENT SAFETY INFORMATION) MANUAL FOR WOOD TRUSS TEMPORARY BRACING REQUIREMENTS.

6. METAL CONNECTORS: ALL METAL CONNECTORS ARE OF GALVANIZED STEEL AND DESIGN APPROVED TO MEET OR EXCEED REQUIRED STANDARDS.

9. SHORING AND BRACING: CONTRACTOR SHALL BE RESPONSIBLE FOR ALL TEMPORARY SHORING AND BRACING.

* THIS SET OF PLANS ARE INTENDED TO BE USED BY CONTRACTORS WITH BUILDING CONSTRUCTION KNOWLEDGE.

* ENERGY PANEL STRUCTURES CAN NOT BE HELD RESPONSIBLE FOR MISUSE OR MISINTERPRETATION OF INFORMATION INCLUDED IN THESE DRAWINGS, OR THE USE OF THIS SET OF PLANS BY PEOPLE WITHOUT BUILDING CONSTRUCTION KNOWLEDGE.

* SIP PANEL WALL CONSTRUCTION BUILDINGS ARE DESIGNED FOR MINIMAL AIR INFILTRATION. IT IS RECOMMENDED THAT GENERAL CONTRACTOR/OWNER WORKS IN CONJUNCTION WITH A HVAC PROFESSIONAL TO DESIGN A SYSTEM TO INSURE AIR QUALITY AND MOISTURE CONTROL. AIR TO AIR EXCHANGERS ARE RECOMMENDED IN SUCH TYPE STRUCTURES.

* RESPONSIBILITY OF THIS SET OF PLANS IS LIMITED TO THE BUILDING DESIGN SHOWN ON THE PLANS. BUILDING DESIGN IS BASED ON NUMBER, SIZE AND LOCATION OF OPENINGS SHOWN ON THE PLANS. NO RESPONSIBILITY IS ASSUMED FOR ADDITIONAL OPENINGS NOT SHOWN ON THE PLANS OR CHANGES IN THE LOCATION OF OPENINGS.

* ALL DOOR AND WINDOW OPENINGS SHOWN ON THIS SET OF PLANS ARE THE ACTUAL SIZE OF THE OPENING PROVIDED. IT IS THE GENERAL CONTRACTOR/OWNER'S RESPONSIBILITY TO VERIFY ALL LOCATIONS AND SIZES OF OPENINGS PRIOR TO CONSTRUCTION.

* EPS WALL PANELS ARE NOT DESIGNED FOR LATERAL LOADS IMPOSED BY CONCRETE FOUNDATION WALLS. CONCRETE WALLS TO BE DESIGNED TO ABSORB ALL LOADS IMPOSED BY EPS STRUCTURE & 100% OF MATERIAL/BACKFILL/ETC (IF ANY) STORED AGAINST THEM. CONCRETE WALL TO IMPOSE NO HORIZONTAL LOAD TO EPS STRUCTURE.

* THIS BUILDING IS DESIGNED USING THE ROOF AS A DIAPHRAGM(DEEP THIN BEAM) TO TRANSFER SIDEWALL AND ROOF WIND LOADS TO THE ENDWALL SHEAR WALLS SHOWN. STEEL PANELS ARE AN INTEGRAL PART OF THE BUILDING STRUCTURE AND ANY FUTURE FIELD MODIFICATIONS MADE MAY BE DETRIMENTAL TO THE BUILDING'S STRUCTURAL PERFORMANCE.

* THIS IS A STRUCTURAL FRAMING PLAN AND IS TO BE USED FOR THAT PURPOSE ONLY, CODES REGARDING FIRE SAFTEY, PERSONAL SAFTEY & INJURY ARE NOT ADDRESSED IN THIS SET OF PLANS AND ARE THE RESPONSIBILITY OF THE CONTRACTOR/OWNER.

* THE CEILING SYSTEM PROVIDED HAS NOT BEEN DESIGNED FOR HUMAN TRAFFIC. CONTRACTORS - IT IS YOUR RESPONSIBILITY TO WARN OTHER TRADERS.

* TO MINIMIZE THE POSSIBILITY OF FASTENER POPPING AND CRACKING IN AREAS ADJACENT TO A WALL AND CEILING INTERSECTION, A FLOATING GYPSUM CORNER ANGLE METHOD OF APPLICATION SHOULD BE USED. PLEASE REFER TO THE GYPSUM ASSOCIATION'S SPECIFICATIONS FOR THE APPLICATION AND FINISHING OF GYPSUM PANEL PRODUCTS.

* THERE MAY BE SOME "BOWING" OF EXTERIOR STRUCTURAL INSULATED PANELS DUE TO A TEMPERATURE AND MOISTURE DIFFERENTIAL BETWEEN INTERIOR AND EXTERIOR OSB SKINS. WHEN THE EXTERIOR SKIN EXPERIENCES COLD TEMPERATURE, ITS MOISTURE CONTENT RISES, WHICH CAUSES THE EXTERIOR SKIN TO EXPAND. THIS MAY CAUSE THE PANEL TO BOW OUT. TO MINIMIZE THE EFFECT, YOU MAY WANT TO CONSIDER:
A.) HIDE THE "BOW" BY USING FLOATING CORNERS ON THE INTERIOR GYPSUM BOARD.
B.) MECHANICALLY FASTENING ONE STRUCTURAL INSULATED PANEL TO THE CROSS WALLS. THE CROSS WALL WILL HAVE TO BE DESIGNED TO RESIST FORCES OF THE BOW, AS WILL THE MECHANICAL FASTENERS.

* THE ATTIC OF THIS STRUCTURE MUST BE PROPERLY VENTILATED. CONSULT ON HVAC ENGINEER FOR PROPER SIZING OF EAVE INLETS, RIDGE OPENINGS, END WALL LOUVERS, OR MECHANICAL SYSTEMS. FAILURE TO PROPERLY VENTILATE THE ATTIC MAY CAUSE PARTITION SEPARATE AT ROOF/CEILING, CONDENSATION ON ROOF MATERIALS, LARGER AIR CONDITIONING LOAD, MOLD OR MILDEW, CORROSION OF TRUSS PLATES, PREMATURE DEGRADATION OF STRUCTURAL BUILDING COMPONENTS.

* ACCORDING TO SECTION 717.4 OF THE 2006 INTERNATIONAL BUILDING CODE DRAFT STOPS ARE NORMALLY REQUIRED EVERY 3,000 SQUARE FEET. THIS STRUCTURE AS ORDERED AND SPECIFIED BY THE DEALER AND/OR OWNER DOES NOT MEET THIS SPECIFICATION. IT IS THE RESPONSIBILITY OF THE DEALER AND/OR OWNER TO ENSURE THAT EITHER THE BUILDINGS MEETS THE EXCEPTIONS NOTED IN THIS SECTION OF THE CODE OR THEY PUT MORE DRAFT STOPS IN. IF IS DECIDED TO PUT MORE DRAFTS STOPS IN THE STRUCTURE, THEY MUST FIRST ENSURE THE EXTRA WEIGHT DOES NOT EFFECT THE STRUCTURAL INTEGRITY OF THE BUILDING.

* INTERIOR FINISH MUST BE COVERED WITH A MINIMUM OF ½" TYPE X SHEETROCK TO PROVIDE AN ADEQUATE THERMAL BARRIER

GENERAL INFORMATION

DEALER:
CRAIGHTON CONSTRUCTION
602 1ST AVE SE
HAMPTON, IA 50441
PHONE: (641) 456-5259
FAX: (641) 456-5259

OWNER:
LEMKE RESIDENCE

FRANKLIN CO, IA

BUILDING TYPE:
SOLID CORE

BUILDING USAGE:
RESIDENTIAL

BUILDING DIMENSIONS:
50'-0"x40'-0"

AREA:
2,840 SQ. FT.

DRAWN:
MAB

REVIEWED BY:
DMM

DATE: REV:
10/25/2010

JOB #:
2010/HOUSE/72523

NOTE: FOOTING SIZES ARE RECOMMENDATIONS BASED ON 2000# PSF SOIL BEARING CAPACITY. CONSULT A FOUNDATION ENGINEER PRIOR TO CONSTRUCTION.

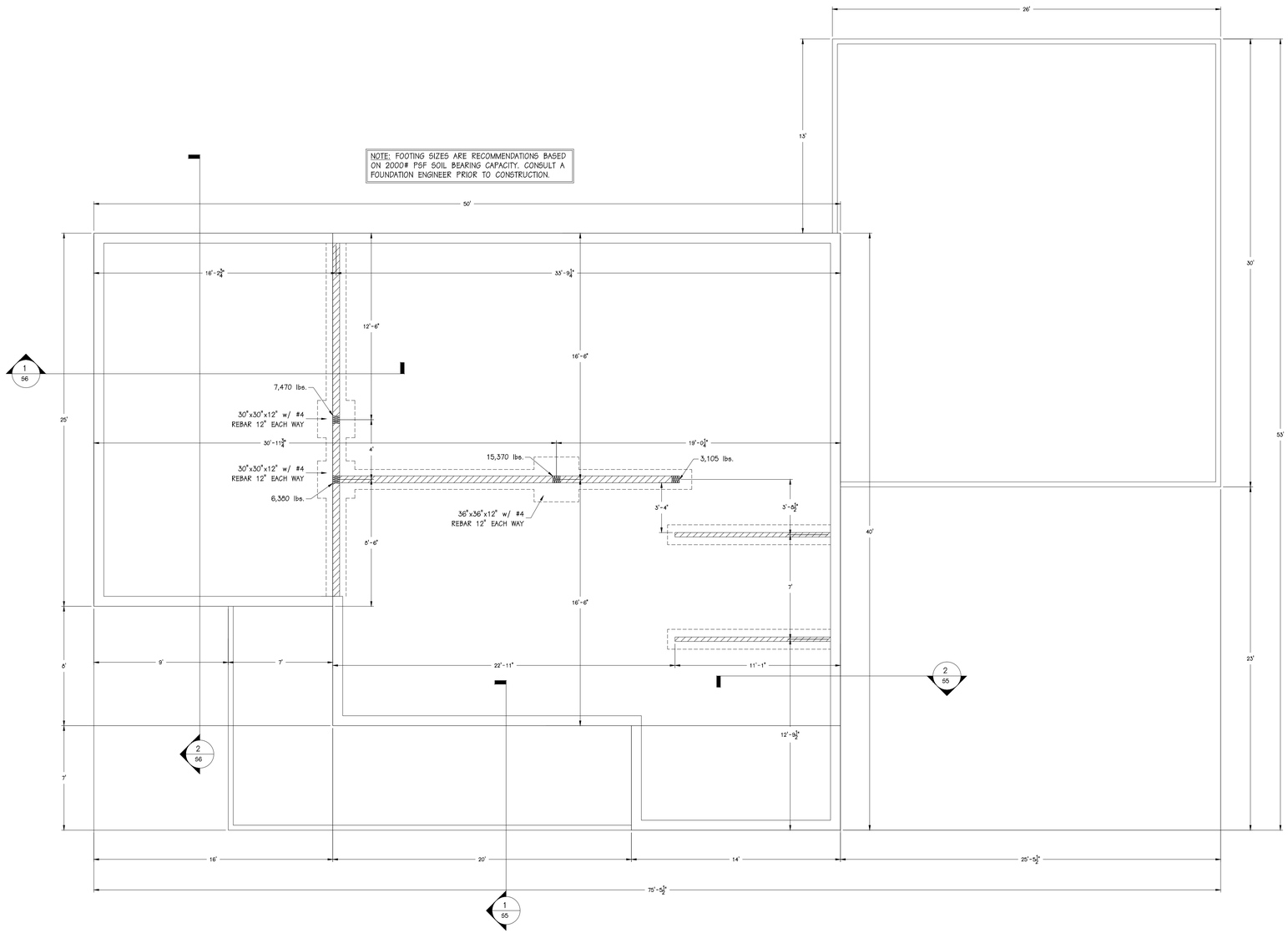

1 / S2 FOUNDATION PLANVIEW
SCALE: 1/4" = 1'-0"

AN EMPLOYEE-OWNED COMPANY

ENERGY PANEL STRUCTURES
102 EAST INDUSTRIAL PARK
GRAETTINGER, IA 51342
PHONE: 712/859-3219
FAX: 712/859-3275
WWW.EPSBUILDINGS.COM

CRAIGHTON CONSTRUCTION

LEMKE RESIDENCE
SOLID CORE HOUSE PACKAGE

SCALE: NOTED	DATE: 10/25/10	REV. 0	SHEET: S2
DRWN. BY: MAB	REVIEWED BY: DMM	REV. 0	
DWG NO. 2010/HOUSE/72523		REV. 0	

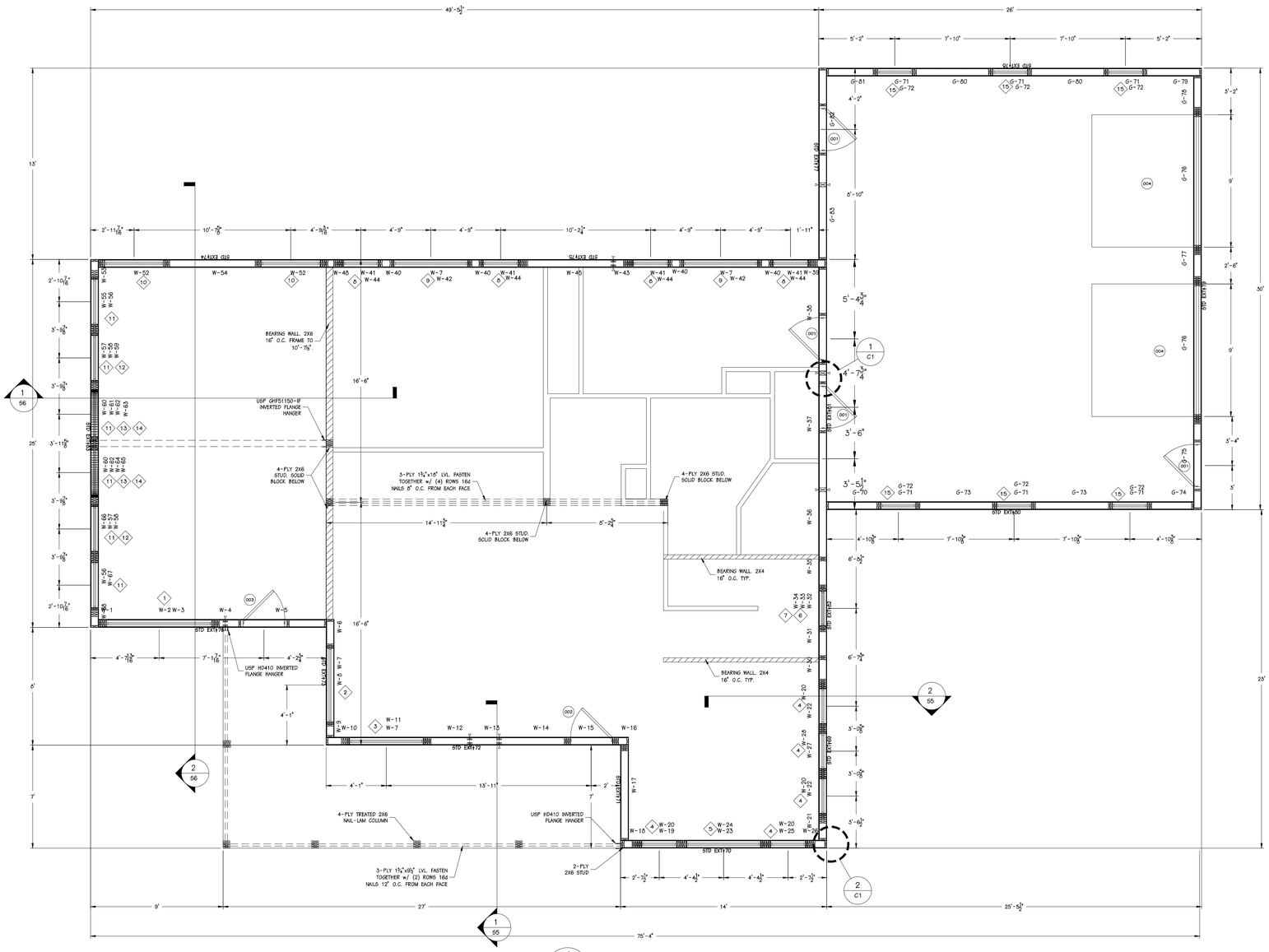

1 / S2 PLANVIEW
SCALE: 1/4" = 1'-0"

WINDOW SCHEDULE							
Number	Quantity	Rough Width	Rough Height	Head Height	Header	Bearing Studs (Each Side)	Full Studs (Each Side)
1	1	7'-5 5/8"	5'-0 7/8"	8'-0"	--	--	--
2	1	5'-3 7/8"	5'-0 7/8"	8'-0"	--	--	--
3	1	5'-3 7/8"	3'-0 7/8"	8'-0"	--	--	--
4	5	2'-8 1/8"	5'-0 7/8"	8'-0"	--	--	--
5	1	5'-3 7/8"	5'-0 7/8"	8'-0"	--	--	--
6	1	2'-8 1/8"	2'-6 5/8"	3'-0 5/8"	--	--	--
7	1	2'-8 1/8"	5'-0 7/8"	13'-2"	--	--	--
8	4	2'-8 1/8"	5'-0 7/8"	8'-0"	--	--	--
9	2	5'-3 7/8"	5'-0 7/8"	8'-0"	--	--	--
10	2	4'-3 7/8"	5'-0 7/8"	8'-0"	--	--	--
11	6	3'-4 1/2"	7'-1 1/8"	8'-0"	--	--	--
12	2	3'-4 1/2"	1'-5 1/2"	10'-3 1/2"	--	--	--
13	2	3'-4 1/2"	2'-10 1/2"	11'-8 1/2"	--	--	--
14	2	3'-4 1/2"	3'-4 1/2"	15'-7"	--	--	--
15	6	2'-8 1/8"	5'-0 7/8"	8'-0"	--	--	--

DOOR OPENING SCHEDULE							
Number	Quantity	Rough Width	Rough Height	Head Height	Header	Bearing Studs (Each Side)	Full Studs (Each Side)
001	4	3'-2 1/2"	6'-10"	6'-10"	SIP HEADER w/ WRAPPED OPENING	--	--
002	1	3'-2"	6'-10"	6'-10"	2-PLY MSR2400 2X10 w/ (1) 2X6 ABOVE & (1) 1X6 BELOW	2	--
003	1	3'-2"	6'-10"	6'-10"	SIP HEADER w/ WRAPPED OPENING	--	--
004	2	9'-0"	7'-0"	7'-0"	2-PLY 1-3/4"x9-1/2" LVL w/ (1) 2X6 ABOVE & (1) BELOW	2	2

AN EMPLOYEE-OWNED COMPANY
ENERGY PANEL STRUCTURES
102 EAST INDUSTRIAL PARK
GRAETTINGER, IA 51342
PHONE: 712/859-3219
FAX: 712/859-3275
WWW.EPSBUILDINGS.COM

CRAIGHTON CONSTRUCTION

LEMKE RESIDENCE
SOLID CORE HOUSE PACKAGE

SCALE: NOTED	DATE: 10/25/10	REV. 0	SHEET: S3
DRWN BY: MAB	REVIEWED BY: DMM	REV. 0	
DWG NO. 2010/HOUSE/72523		REV. 0	

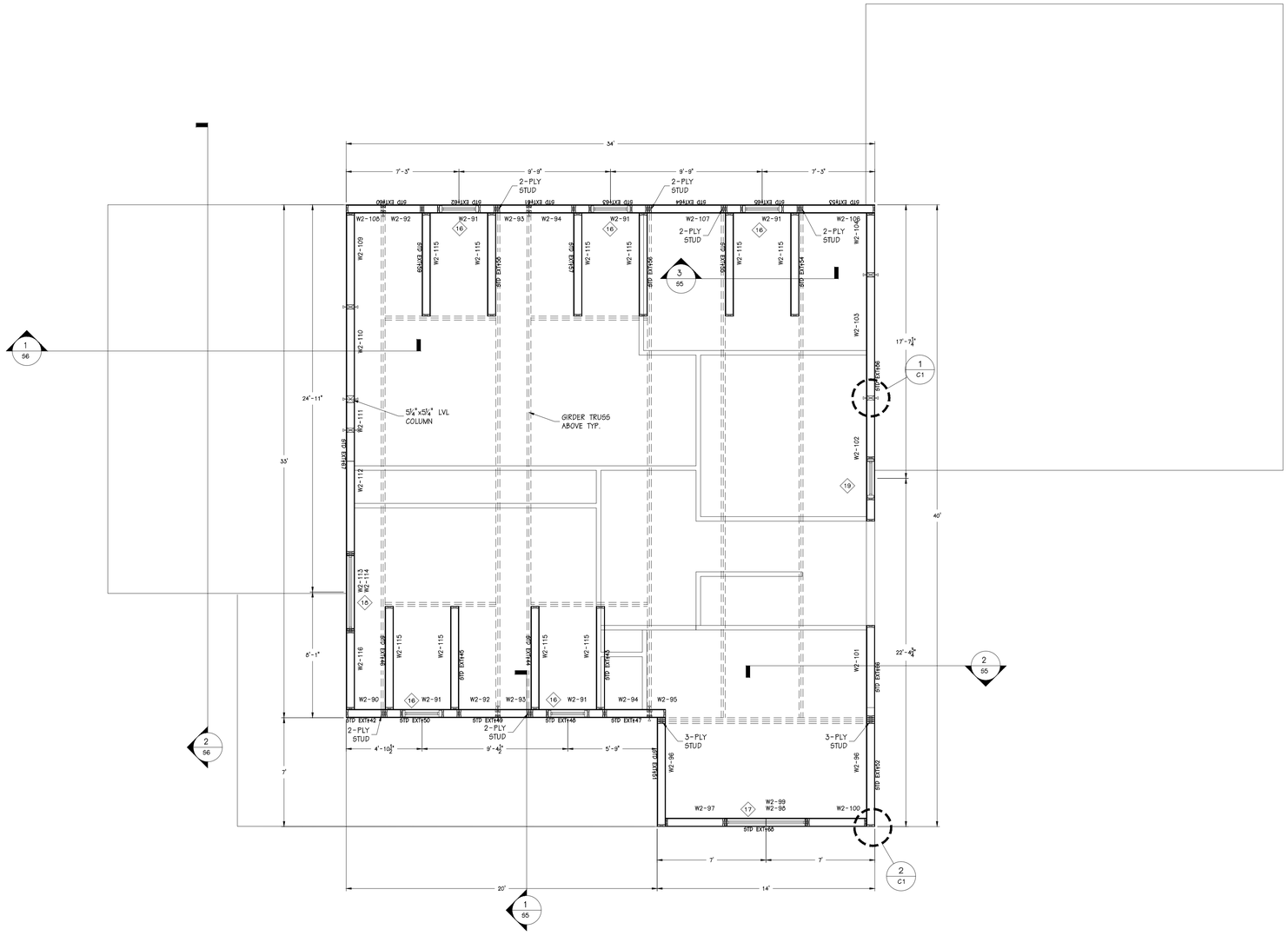

1 / S4 2ND FLOOR PLANVIEW
SCALE: 1/4" = 1'-0"

WINDOW SCHEDULE							
Number	Quantity	Rough Width	Rough Height	Head Height	Header	Bearing Stude (Each Side)	Full Stude (Each Side)
16	5	2'-6 1/8"	5'-0 7/8"	6'-10 1/2"	--	--	--
17	1	5'-3 7/8"	5'-0 7/8"	6'-10 1/2"	--	--	--
18	1	4'-11 7/8"	5'-0 7/8"	6'-10 1/2"	--	--	--
19	1	2'-6 1/8"	5'-0 7/8"	6'-10 1/2"	--	--	--

AN EMPLOYEE-OWNED COMPANY
ENERGY PANEL STRUCTURES
102 EAST INDUSTRIAL PARK
GRAETTINGER, IA 51342
PHONE: 712/859-3219
FAX: 712/859-3275
WWW.EPSBUILDINGS.COM

CRAIGHTON CONSTRUCTION

LEMKE RESIDENCE
SOLID CORE HOUSE PACKAGE

SCALE: NOTED	DATE: 10/25/10	REV. 0	SHEET: S4
DRWN BY: MAB	REVIEWED BY: DMM	REV. 0	
DWG NO. 2010/HOUSE/72523		REV. 0	

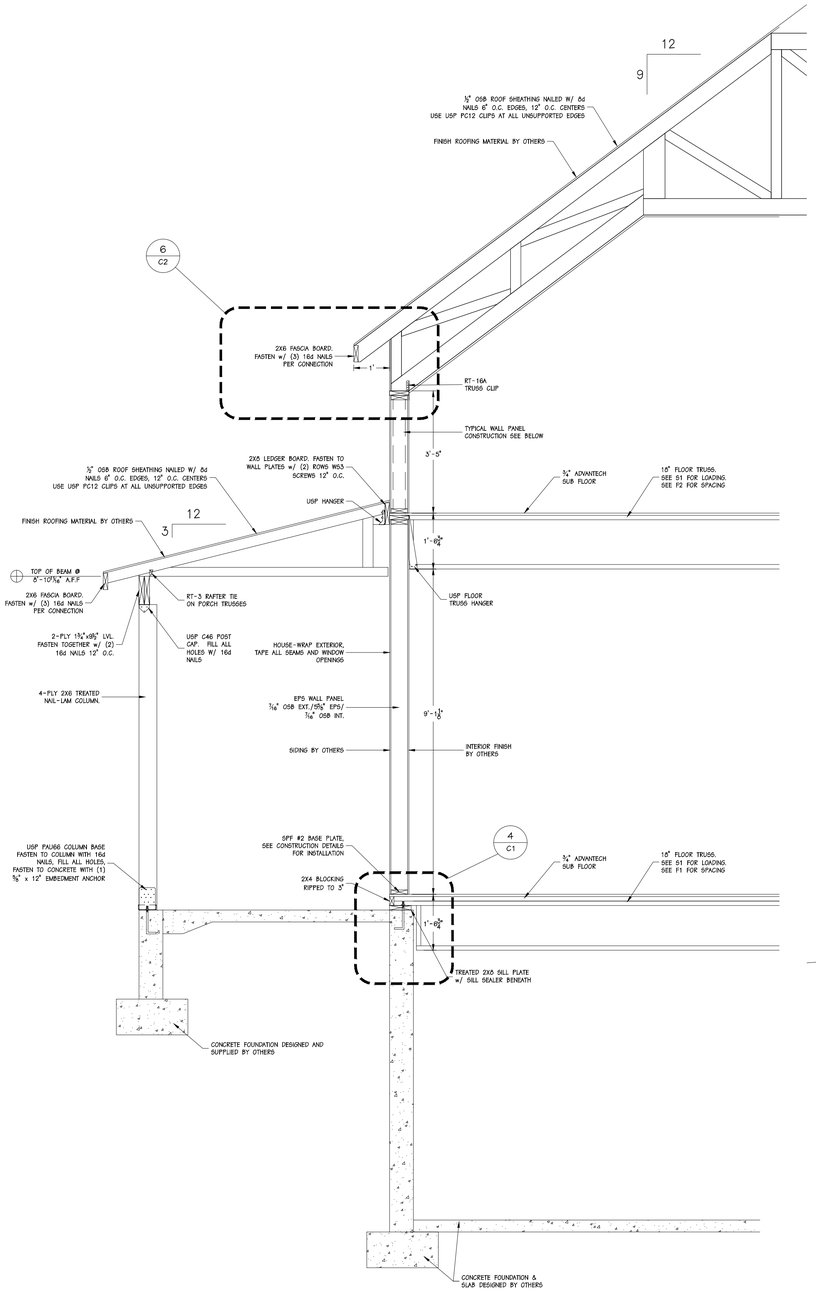

1 / S5 CROSS SECTION
SCALE: 1/2" = 1'-0"

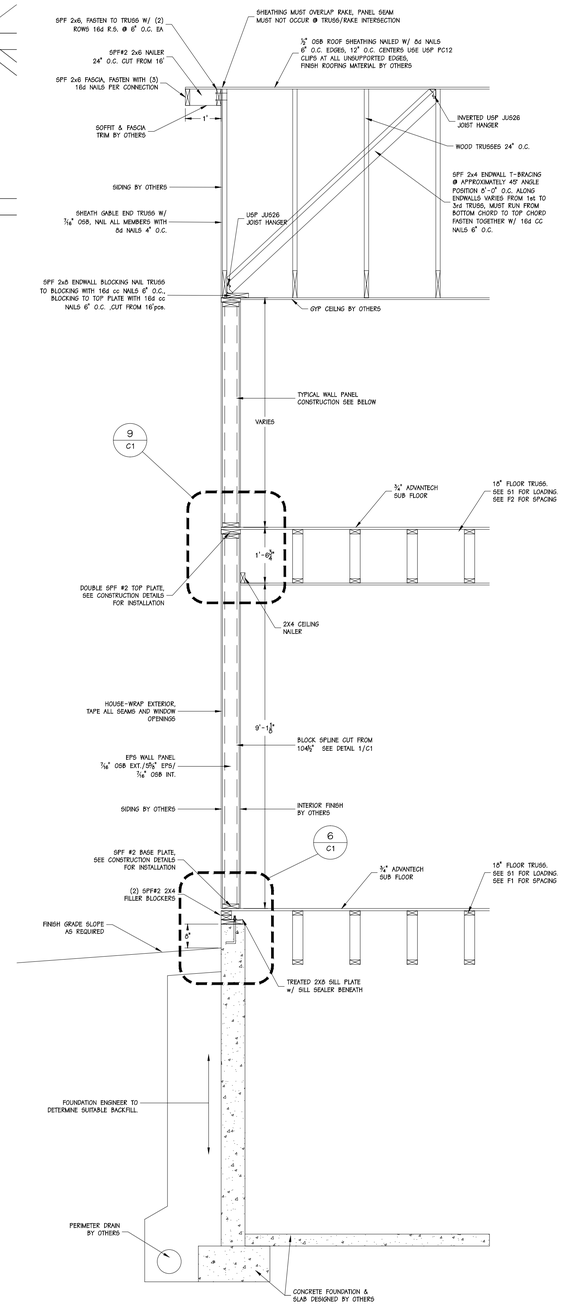

2 / S5 CROSS SECTION
SCALE: 1/2" = 1'-0"

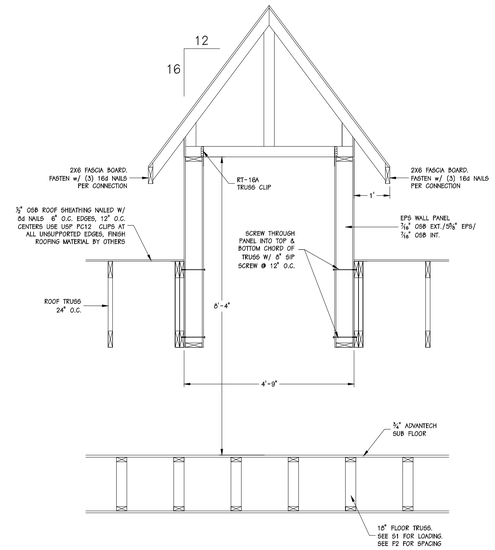

3 / S5 DORMER CROSS SECTION
SCALE: 1/2" = 1'-0"

RT3A
Hurricane/Seismic Anchor

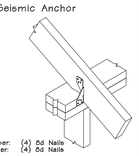

Fasteners
Supporting Member: (4) 8d Nails
Supported Member: (4) 8d Nails

USP Structural Connectors ™
©Copyright 2005 United Steel Products Company

RT16A
Hurricane/Seismic Anchor

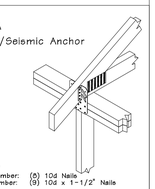

Fasteners
Supporting Member: (8) 10d Nails
Supported Member: (8) 10d x 1-1/2" Nails

USP Structural Connectors ™
©Copyright 2005 United Steel Products Company

AN EMPLOYEE-OWNED COMPANY
ENERGY PANEL STRUCTURES
102 EAST INDUSTRIAL PARK
GRAETTINGER, IA 51342
PHONE: 712/859-3219
FAX: 712/859-3275
WWW.EPSBUILDINGS.COM

CRAIGHTON CONSTRUCTION

LEMKE RESIDENCE
SOLID CORE HOUSE PACKAGE

SCALE: NOTED	DATE: 10/25/10	REV. 0	SHEET: S5
DRWN BY: MAB	REVIEWED BY: DMM	REV. 0	
DWG NO. 2010/HOUSE/72523		REV. 0	

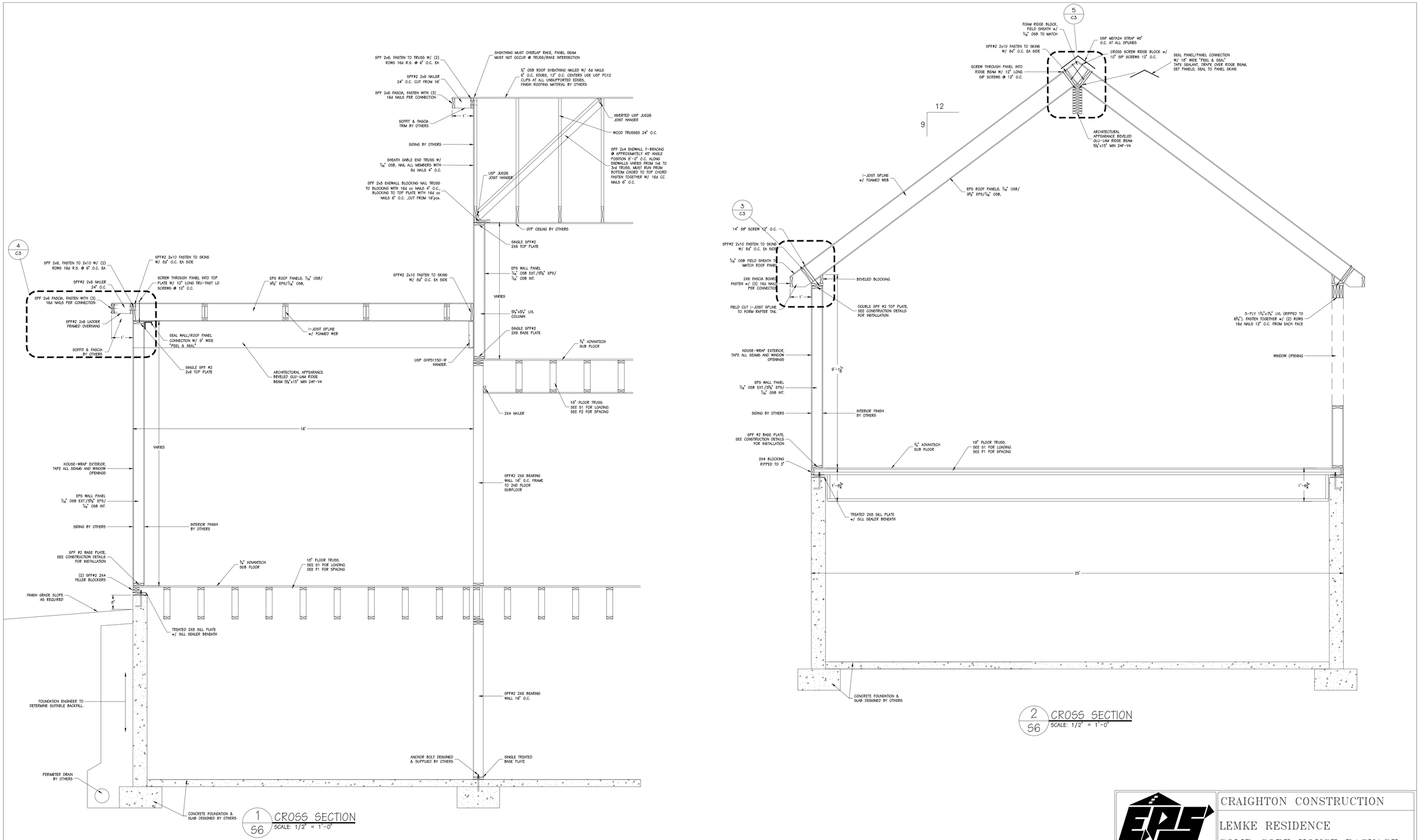

AN EMPLOYEE-OWNED COMPANY

ENERGY PANEL STRUCTURES
102 EAST INDUSTRIAL PARK
GRAETTINGER, IA 51342
PHONE: 712/859-3219
FAX: 712/859-3275
WWW.EPSBUILDINGS.COM

CRAIGHTON CONSTRUCTION

LEMKE RESIDENCE
SOLID CORE HOUSE PACKAGE

SCALE: NOTED	DATE: 10/25/10	REV. 0	SHEET: S6
DRWN BY: MAB	REVIEWED BY: DMM	REV. 0	
DWG NO. 2010/HOUSE/72523		REV. 0	

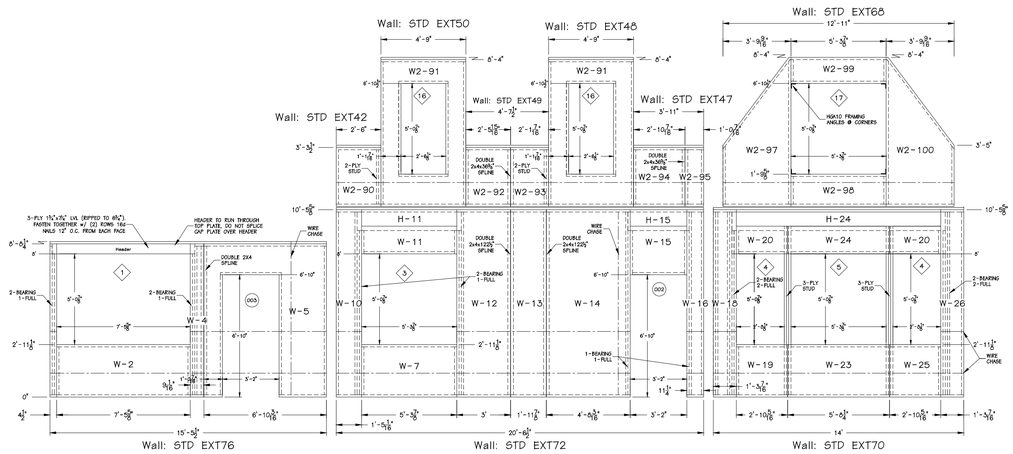

1 S7 FRONT PANEL ELEVATION
SCALE: 1/4" = 1'-0"

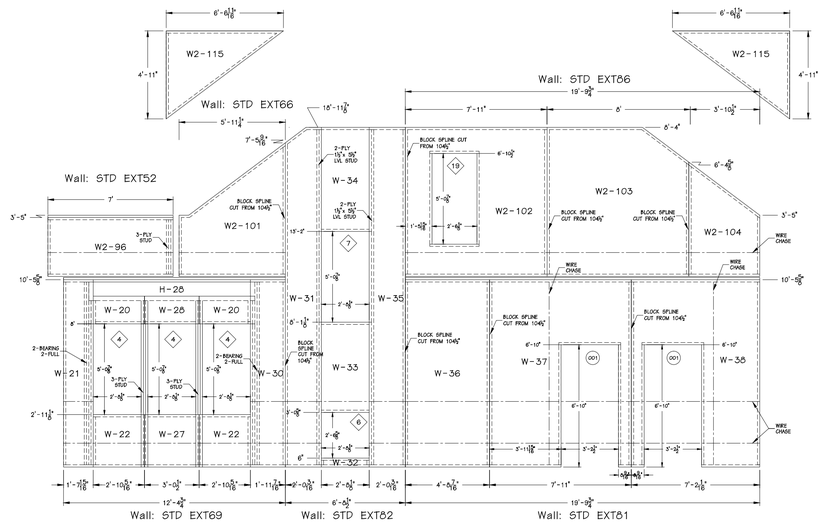

2 S7 RIGHT PANEL ELEVATION
SCALE: 1/4" = 1'-0"

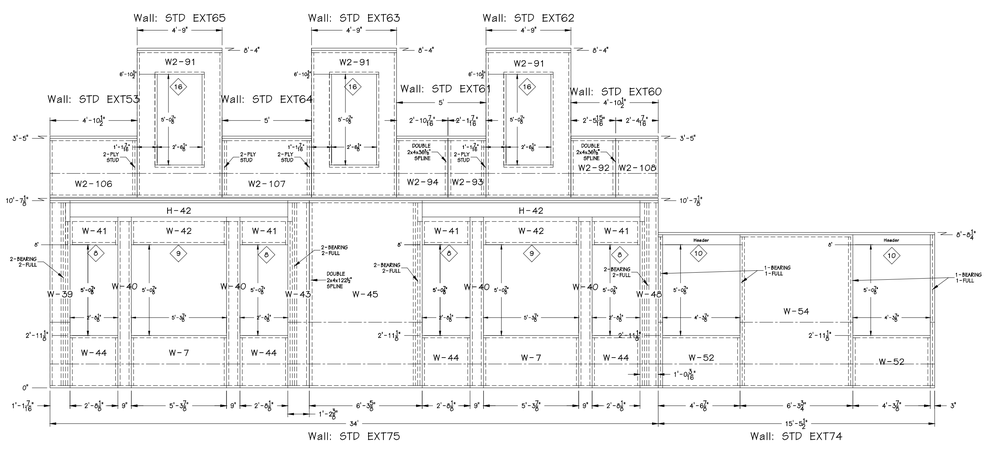

3 S7 REAR PANEL ELEVATION
SCALE: 1/4" = 1'-0"

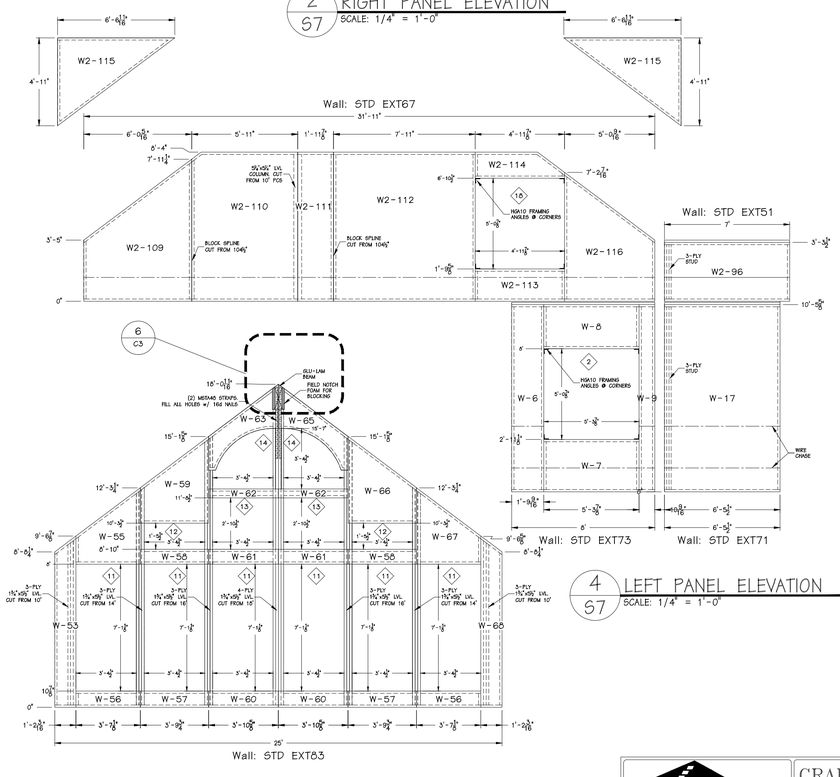

4 S7 LEFT PANEL ELEVATION
SCALE: 1/4" = 1'-0"

AN EMPLOYEE-OWNED COMPANY

ENERGY PANEL STRUCTURES
102 EAST INDUSTRIAL PARK
GRAETTINGER, IA 51342
PHONE: 712/859-3219
FAX: 712/859-3275
WWW.EPSBUILDINGS.COM

CRAIGHTON CONSTRUCTION

LEMKE RESIDENCE

SOLID CORE HOUSE PACKAGE

SCALE: NOTED	DATE: 10/25/10	REV. 0	SHEET: S7
DRWN BY: MAB	REVIEWED BY: DMM	REV. 0	
DWG NO. 2010/HOUSE/72523		REV. 0	

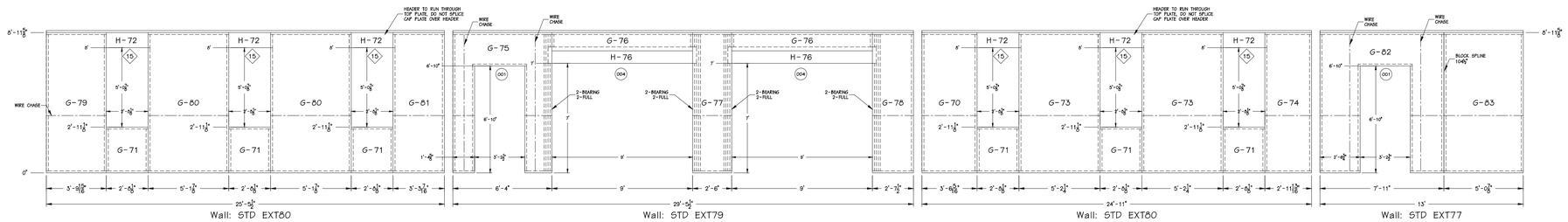

1/S8 GARAGE PANEL ELEVATION
SCALE: 1/4" = 1'-0"

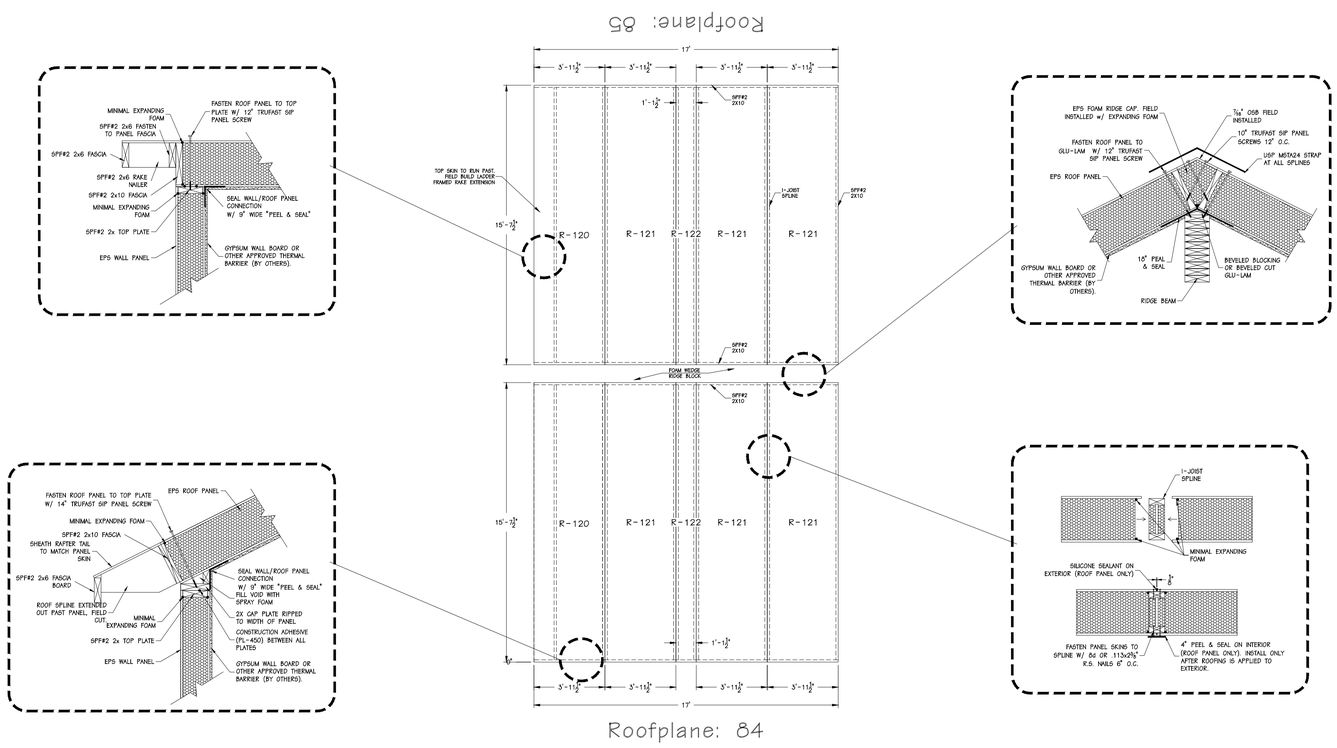

2/S8 ROOF PANEL LAYOUT
SCALE: 1/4" = 1'-0"

AN EMPLOYEE-OWNED COMPANY
ENERGY PANEL STRUCTURES
102 EAST INDUSTRIAL PARK
GRAETTINGER, IA 51342
PHONE: 712/859-3219
FAX: 712/859-3275
WWW.EPSBUILDINGS.COM

CRAIGHTON CONSTRUCTION

LEMKE RESIDENCE
SOLID CORE HOUSE PACKAGE

SCALE: NOTED	DATE: 10/25/10	REV. 0	SHEET: S8
DRWN BY: MAB	REVIEWED BY: DMM	REV. 0	
DWG NO. 2010/HOUSE/72523		REV. 0	

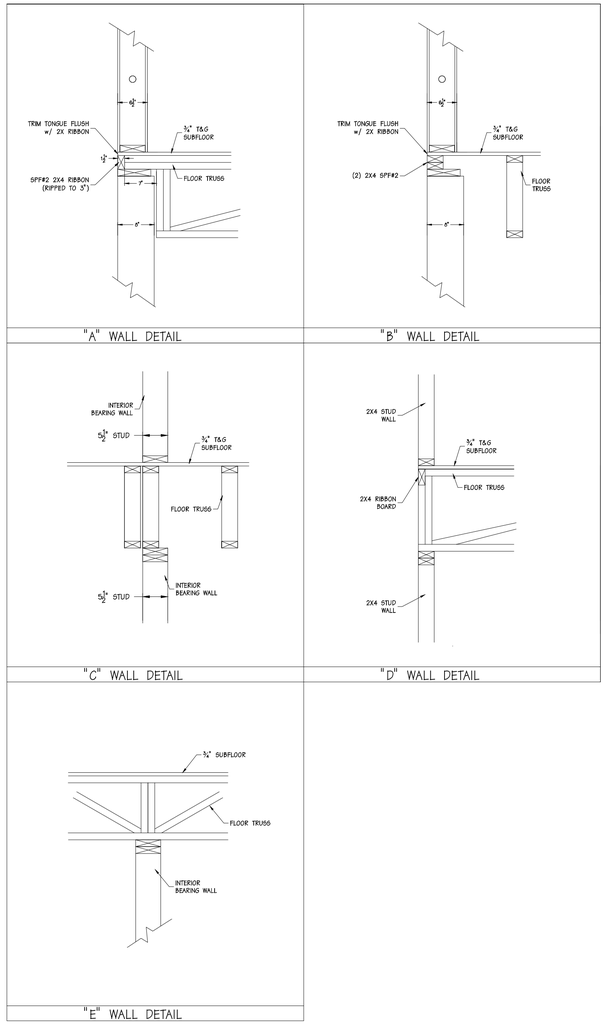

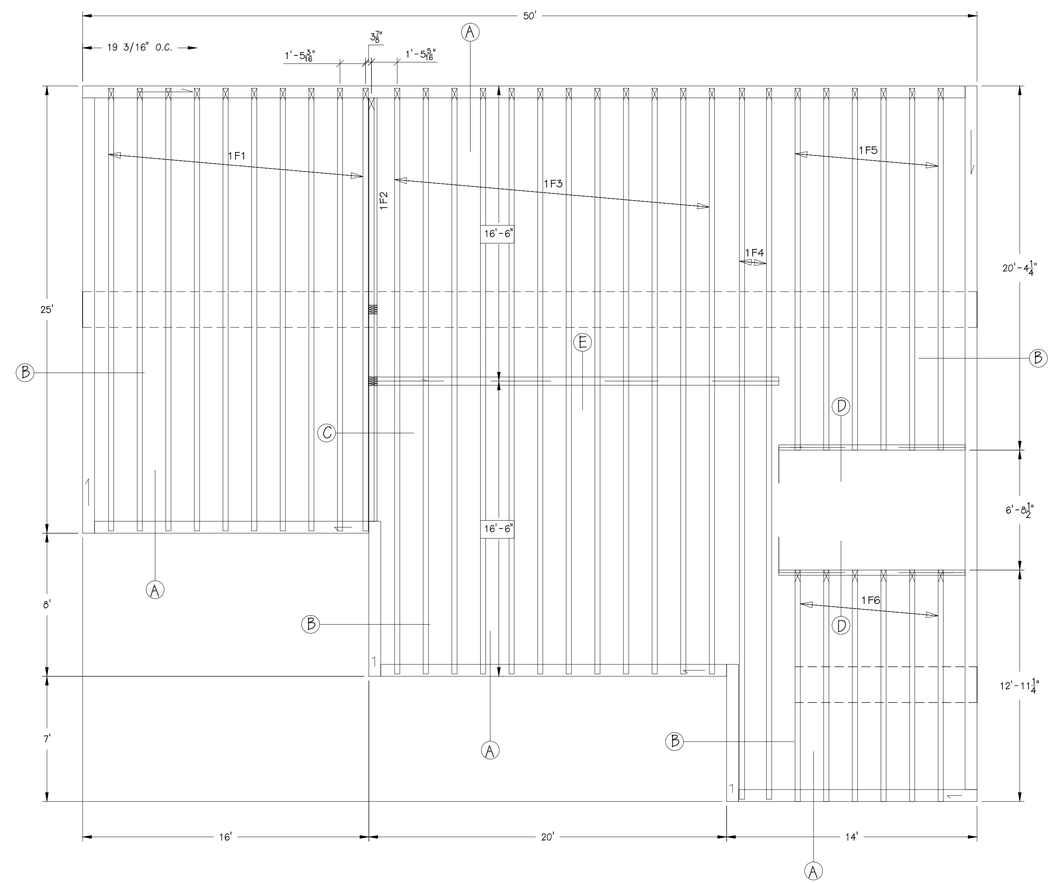

1 / F1 1ST FLOOR TRUSS LAYOUT
SCALE: 1/4" = 1'-0"

AN EMPLOYEE-OWNED COMPANY
ENERGY PANEL STRUCTURES
102 EAST INDUSTRIAL PARK
GRAETTINGER, IA 51342
PHONE: 712/859-3219
FAX: 712/859-3275
WWW.EPSBUILDINGS.COM

CRAIGHTON CONSTRUCTION

LEMKE RESIDENCE
SOLID CORE HOUSE PACKAGE

SCALE: NOTED	DATE: 10/25/10	REV. 0	SHEET:	
DRWN BY: MAB	REVIEWED BY: DMM	REV. 0	F1	
DWG NO. 2010/HOUSE/72523		REV. 0		

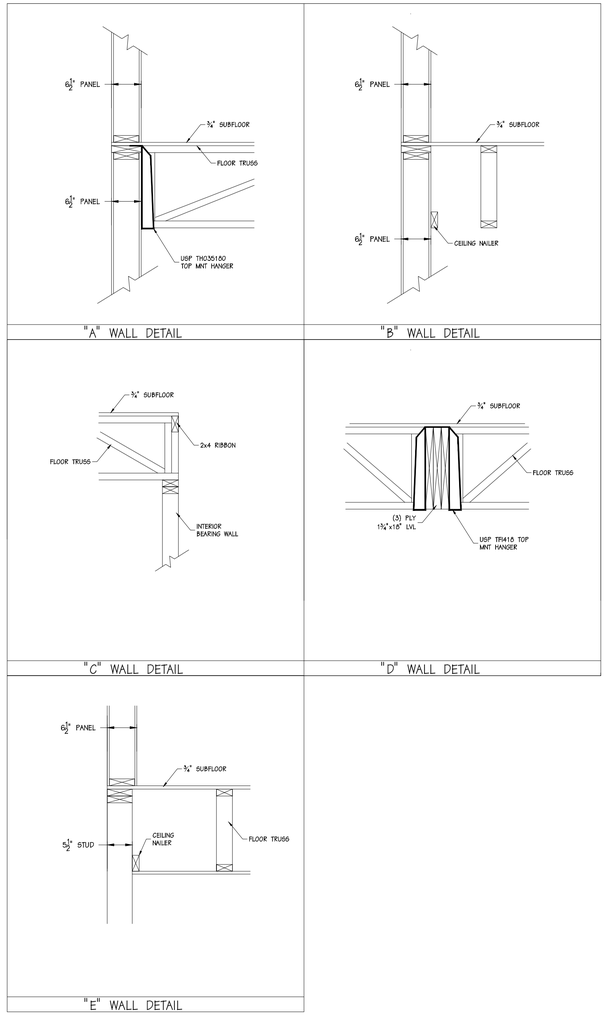

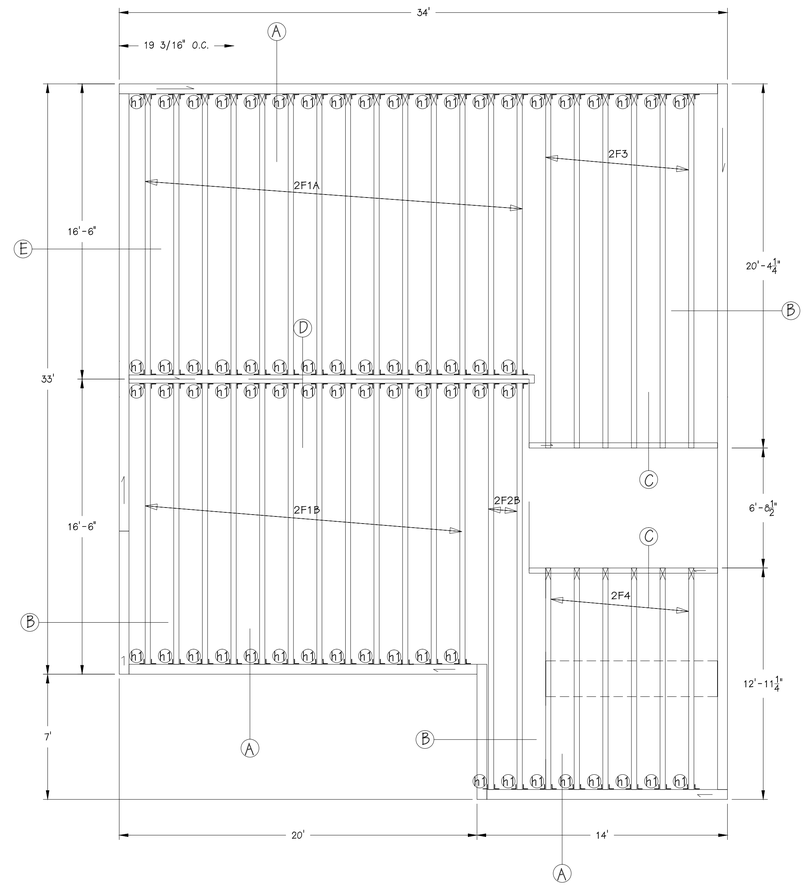

HANGER SYMBOL	HANGER TYPE	QUANTITY	FASTENERS HEADER	FASTENERS JOIST
H1	USP TF1418	68	(6) 16d	(2) 10d x 1½"

1 / F2 2ND FLOOR TRUSS LAYOUT
SCALE: 1/4" = 1'-0"

AN EMPLOYEE-OWNED COMPANY
ENERGY PANEL STRUCTURES
102 EAST INDUSTRIAL PARK
GRAETTINGER, IA 51342
PHONE: 712/859-3219
FAX: 712/859-3275
WWW.EPSBUILDINGS.COM

CRAIGHTON CONSTRUCTION

LEMKE RESIDENCE
SOLID CORE HOUSE PACKAGE

SCALE: NOTED	DATE: 10/25/10	REV. 0	SHEET: F2
DRWN BY: MAB	REVIEWED BY: DMM	REV. 0	
DWG NO. 2010/HOUSE/72523		REV. 0	

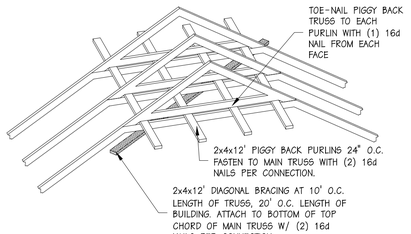

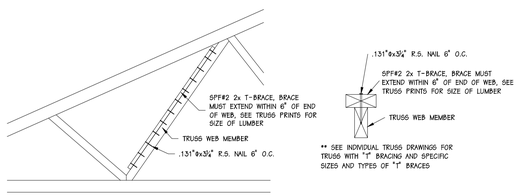

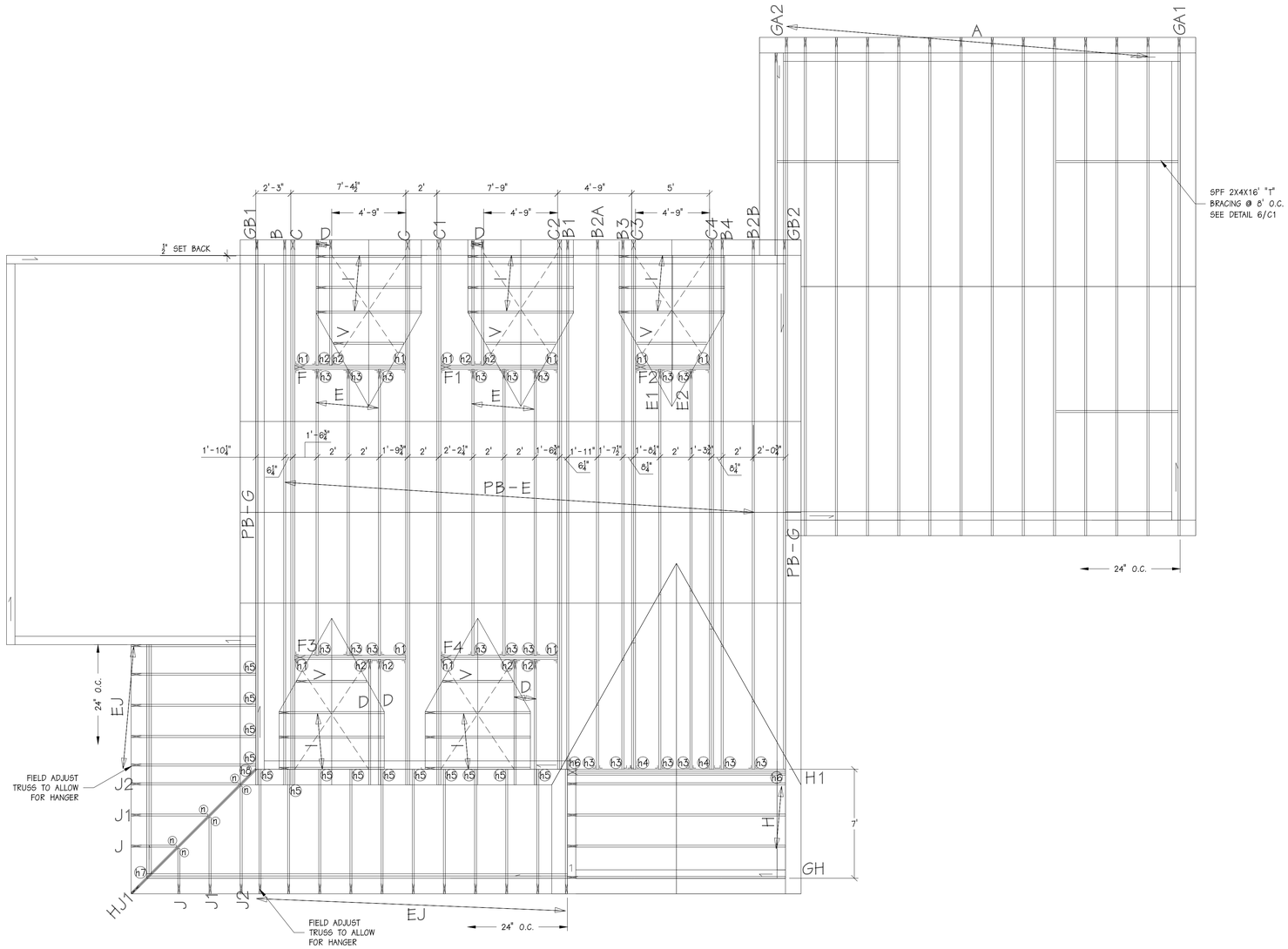

1 / R1 ROOF TRUSS LAYOUT
SCALE: 1/4" = 1'-0"

HANGER SYMBOL	HANGER TYPE	QUANTITY	FASTENERS HEADER	FASTENERS JOIST
h1	USP THD26-2	10	(16) 16d	(12) 10d
h2	USP LS26S	6	(7) 16d	(7) 10d x 1½"
h3	USP HUS26	19	(14) 16d	(6) 16d
h4	USP THD26-2	2	(26) 16d	(16) 10d
h5	USP JL26	14	(6) 10d	(4) 10d
h6	USP HGA10	2	(4) WS15 SCREWS TO TRUSS	(4) WS3 SCREWS TO PLATE
h7	USP HHCP2	1	(10) 10d x 1½" TO TRUSS	(10) 10d x 1½" TO PLATE
h8	USP SNP3 TC	2	(6) 8d x 1½"	(6) 8d x 1½"
N	(3) 16d R.S. T.C. & B.C.	--	--	--

AN EMPLOYEE-OWNED COMPANY
ENERGY PANEL STRUCTURES
102 EAST INDUSTRIAL PARK
GRAETTINGER, IA 51342
PHONE: 712/859-3219
FAX: 712/859-3275
WWW.EPSBUILDINGS.COM

CRAIGHTON CONSTRUCTION

LEMKE RESIDENCE
SOLID CORE HOUSE PACKAGE

SCALE: NOTED	DATE: 10/25/10	REV. 0	SHEET: R1
DRWN BY: MAB	REVIEWED BY: DMM	REV. 0	
DWG NO. 2010/HOUSE/72523		REV. 0	

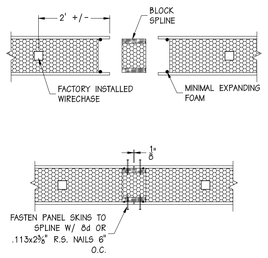

1/C1 – PANEL / PANEL CONNECTION

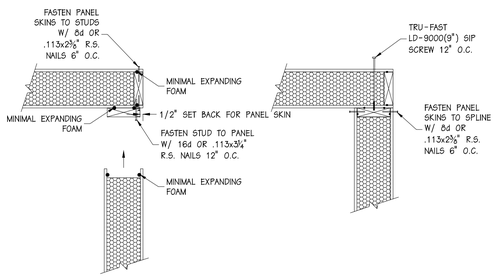

2A/C1 – CORNER CONNECTION

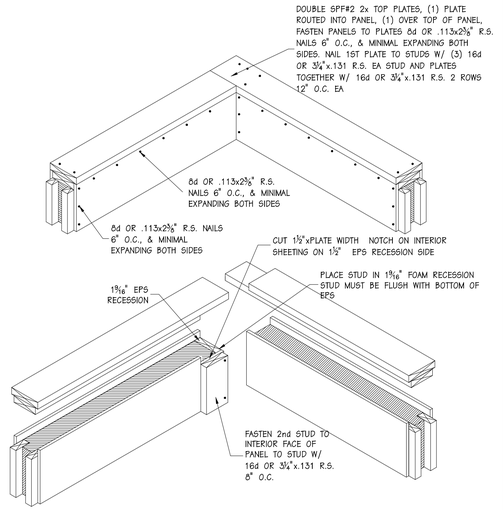

2B/C1 – CORNER CONNECTION

WALL PANEL/FLOOR FASTENING SCHEDULE

COMONENTS	TYPE OF FASTENER	FREQUENCY	SUPPLIED BY
SILL PLATE TO FOUNDATION	MIN ⅝"x8" ANCHOR BOLT	48" O.C. & 6" FROM ALL BREAKS AND OPENINGS	BY OTHERS
PLATES TO STUDS	16d CC SINKER OR 3¼"x.131 R.S.	2 PER STUD	EPS
PLATES TO DOUBLE 2x4 SPLINE	16d CC SINKER OR 3¼"x.131 R.S.	2 PER 2X4	EPS
CAP PLATE TO TOP PLATE	16d CC SINKER OR 3¼"x.131 R.S.	2 ROWS 12" O.C.	EPS
PANELS TO PLATES	8d CC SINKERS OR .113x2⅜" R.S. NAILS 6" O.C.	6" O.C. INT. & EXT.	EPS
PANELS TO STUDS	8d CC SINKERS OR .113x2⅜" R.S. NAILS 6" O.C.	6" O.C INT. & EXT.	EPS
BASE PLATE TO SUBFLOOR	USP WS3 SCREWS	(1) ROW 12" O.C PARALLEL TRUSS (2) SCREWS PER PERP. TRUSS	EPS
BASE PLATE TO SILL PLATE (PANELS PAST)	USP WS3 SCREW	(2) SCREWS PER FT	EPS
SUBFLOOR TO TRUSS/JOIST	8d R.S OR .113x2⅜" R.S. NAILS 6" O.C.	4" O.C. EDGES 6" O.C. CENTER	EPS
EPS WALL TO FLOOR TRUSS/JOIST (PANELS PAST)	9" SIP SCREW	16" O.C. TRUSS PARALLEL (1) PER TRUSS PERP.	EPS
RIM BOARD TO TRUSS/JOIST	16d CC SINKER OR 3¼"x.131 R.S.	6" O.C EACH CORD	EPS
TRUSS/JOIST TO SILL	16d R.S. OR 3¼"x.131 R.S. AT ANGLE	(2) ROWS 4" O.C. (6) PER TRUSS	EPS
TRUSS TO SILL	USP JUS46 HANGER TECO NAILS	FILL ALL HOLES	TRUSS SUPPLIER

WALL PANEL/FLOOR ADHESIVE SCHEDULE

COMONENTS	TYPE OF ADHESIVE	FREQUENCY	SUPPLIED BY
RIM BOARD TO SILL PLATE	CONSTRUCTION ADHESIVE PL-450	(1) CONTINUOUS BEAD	EPS
FLOOR TRUSS/JOIST TO SILL PLATE	CONSTRUCTION ADHESIVE PL-450	(1) CONTINUOUS BEAD	EPS
SUBFLOOR TO RIM BOARD & FLOOR TRUSS/JOIST	CONSTRUCTION ADHESIVE PL-450	(1) CONTINUOUS BEAD	EPS
BASE PLATE TO SUBFLOOR OR SILL PLATE	CONSTRUCTION ADHESIVE PL-450	(2) CONTINUOUS BEADS	EPS
PANEL TO BASE PLATE	TOUCH-N-SEAL ALL SEASON GUN FOAM	(2) CONTINUOUS BEADS	EPS
PANEL TO SPINES	TOUCH-N-SEAL ALL SEASON GUN FOAM	(2) CONTINUOUS BEADS	EPS
PANEL TO TOP PLATE	TOUCH-N-SEAL ALL SEASON GUN FOAM	(2) CONTINUOUS BEADS	EPS
TOP PLATE TO CAP PLATE	CONSTRUCTION ADHESIVE PL-450	(2) CONTINUOUS BEADS	EPS

7/C1 – FASTENING SCEDULE

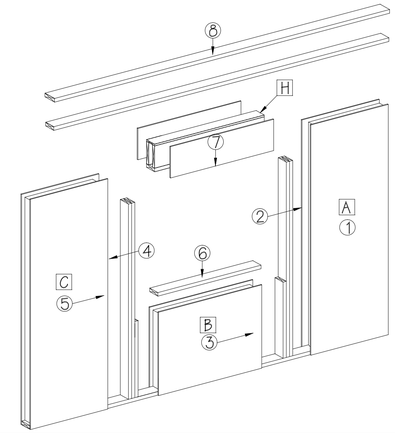

TYPICAL 8'-1⅛" OPENING FRAMING

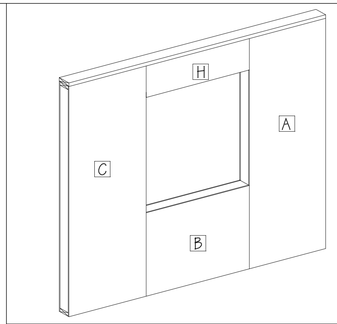

1) ERECT PANEL "A"
2) PRE-ASSEMBLE FULL, BEARING, AND FILLER STUDS, INSTALL INTO PANEL "A".
3) SLIDE PANEL "B" INTO PLACE.
4) PRE-ASSEMBLE FULL, BEARING, AND FILLER STUDS, INSTALL INTO PANEL "C".
5) SLIDE PANEL "C" INTO PLACE, CHECKING HORIZONTAL R.O. DIMENSION.
6) INSTALL LOWER OPENING FRAMING.
7) DROP HEADER INTO OPENING. SHEATH WITH LOOSE OSB.
8) CONTINUE WITH WALL, INSTALL TOP PLATES

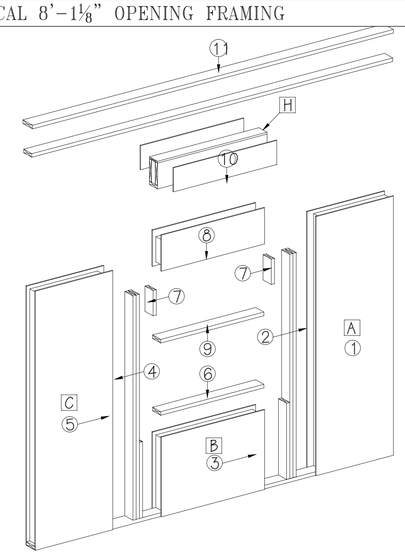

TYPICAL 9'-1⅛"+ OPENING FRAMING

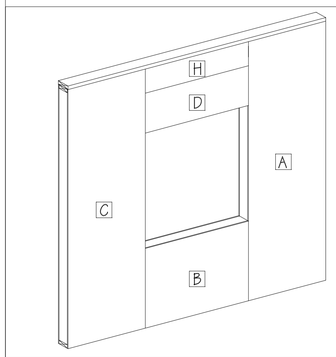

1-6) SEE ABOVE
7) INSTALL FILLER PANEL BLOCKING
8) SLIDE UPPER PANEL INTO PLACE, VERIFY VERTICAL R.O.
9) INSTALL UPPER OPENING FRAMING.
10) DROP HEADER INTO OPENING. SHEATH WITH LOOSE OSB.
11) CONTINUE WITH WALL, INSTALL TOP PLATES

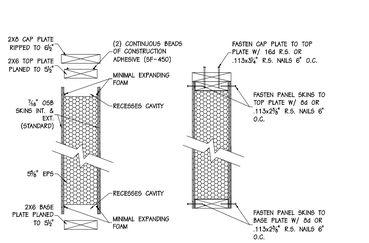

3/C1 – WALL PANEL ASSEMBLY

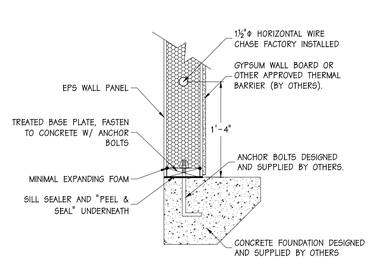

5/C1 – BASEPLATE CONNECTION

10/C1 – DIVISION WALL / PANEL ATTACHMENT

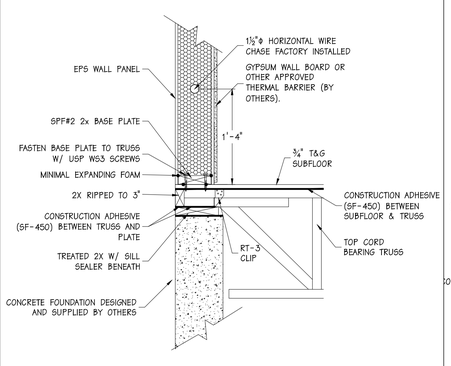

4/C1 – BASE DETAIL

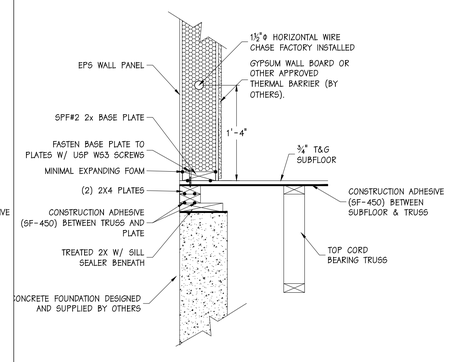

6/C1 – BASE DETAIL

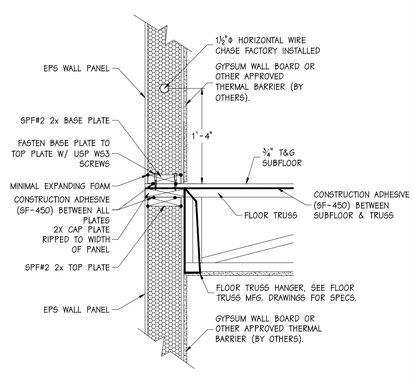

8/C1 – BASE DETAIL

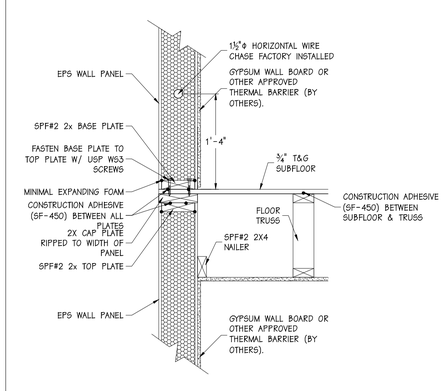

9/C1 – BASE DETAIL

AN EMPLOYEE-OWNED COMPANY
ENERGY PANEL STRUCTURES
102 EAST INDUSTRIAL PARK
GRAETTINGER, IA 51342
PHONE: 712/859-3219
FAX: 712/859-3275
WWW.EPSBUILDINGS.COM

CRAIGHTON CONSTRUCTION

LEMKE RESIDENCE

SOLID CORE HOUSE PACKAGE

SCALE: NOTED	DATE: 10/25/10	REV. 0	SHEET: C1
DRWN BY: MAB	REVIEWED BY: DMM	REV. 0	
DWG NO. 2010/HOUSE/72523		REV. 0	

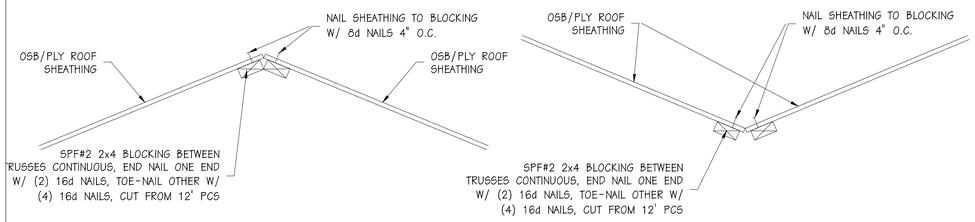

1/C2 – PLYWOOD DECK ROOF HIP & VALLEY BLOCKING DETAILS

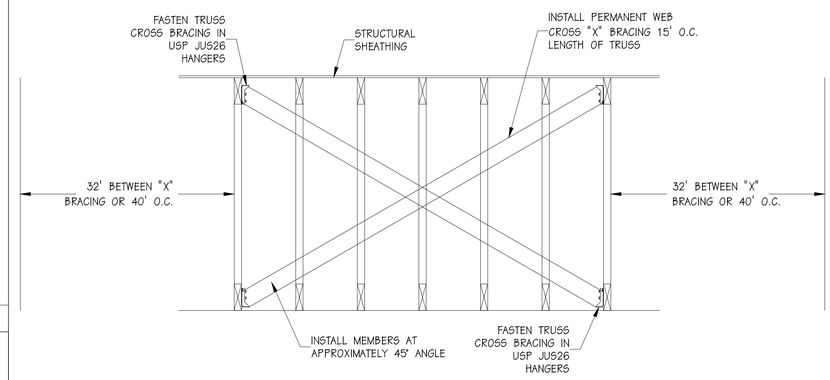

4/C2 – X-BRACING DETAIL

ROOF TRUSS FASTENING SCHEDULE

COMONENTS	TYPE OF FASTENER	FREQUENCY	SUPPLIED BY
TRUSS TO TOP PLATE	USP RT-16 TECO NAILS	FILL ALL HOLES	EPS
FASCIA TO TRUSS	16d CC SINKER OR 3¼"x.131 R.S.	(3) PER CONNECTION	EPS
INSULATION STOP	8d NAILS OR .113x2⅜" R.S.	4" O.C.	EPS
ROOF SHEATHING	8d NAILS OR .113x2⅜" R.S.	4" O.C. EDGES 6" O.C. CENTERS	EPS
GABLE END SHEATHING	8d NAILS OR .113x2⅜" R.S.	4" O.C	EPS
BOTTOM CORD BRACING LATERAL BRACING DIAGIONAL BRACING	16d CC SINKER OR 3¼"x.131 R.S.	(2) PER CONNECTION	EPS
X-BRACING	USP JUS26 TECO NAILS	(4) PER X-BRACE	EPS

7/C2 – FASTENING SCHEDULE

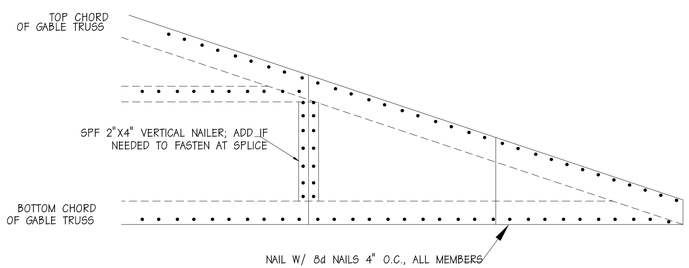

2/C2 – GABLE END SHEATHING FASTENING

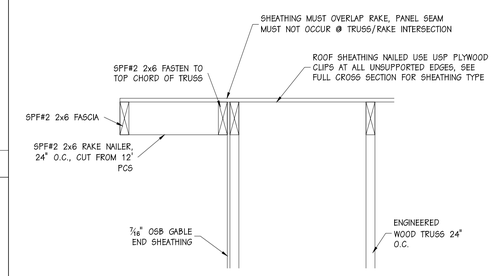

5/C2 – RAKE OVERHANG DETAIL

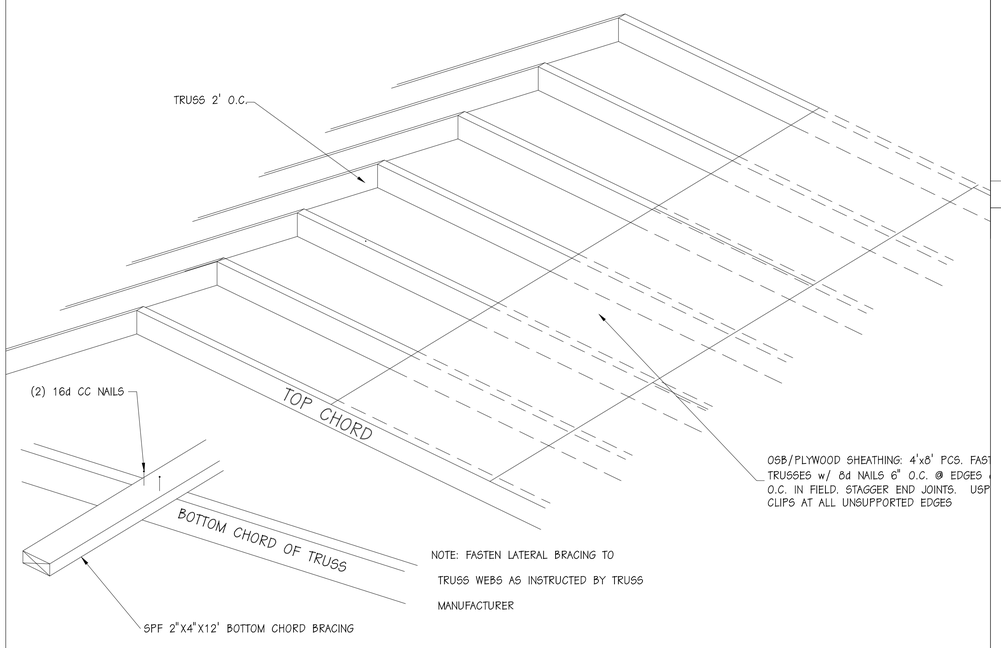

3/C3 – 2' O.C. ROOF TRUSSES ROOF SHEATHING CONNECTION

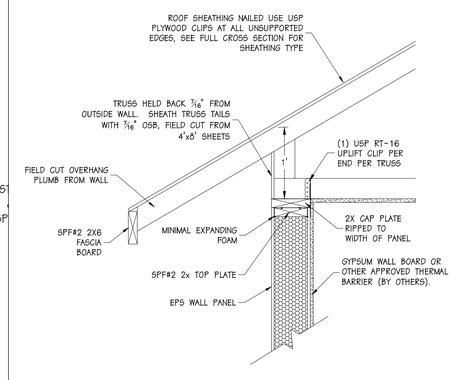

6/C2 – EAVE DETAIL

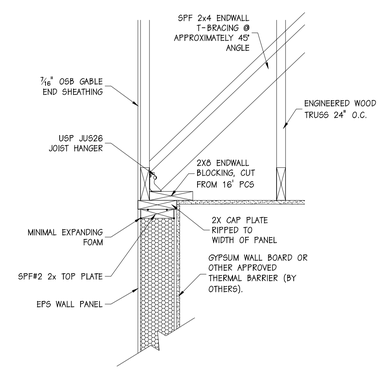

8/C2 – ENDWALL DETAIL

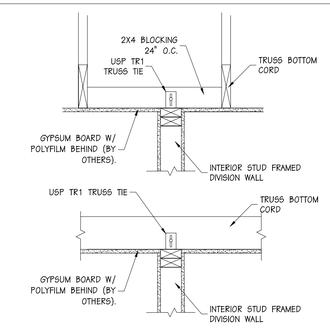

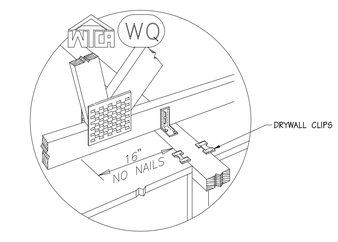

9/C2 – DIVISION WALL / TRUSS CONNECTION

AN EMPLOYEE-OWNED COMPANY
ENERGY PANEL STRUCTURES
102 EAST INDUSTRIAL PARK
GRAETTINGER, IA 51342
PHONE: 712/859-3219
FAX: 712/859-3275
WWW.EPSBUILDINGS.COM

CRAIGHTON CONSTRUCTION

LEMKE RESIDENCE

SOLID CORE HOUSE PACKAGE

SCALE: NOTED	DATE: 10/25/10	REV. 0	SHEET: C2
DRWN BY: MAB	REVIEWED BY: DMM	REV. 0	
DWG NO. 2010/HOUSE/72523		REV. 0	

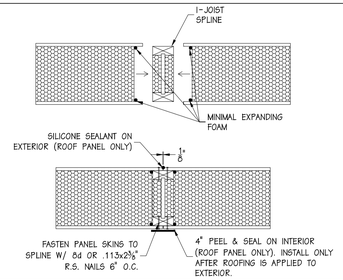

1/C3 – ROOF PANEL / PANEL CONNECTION

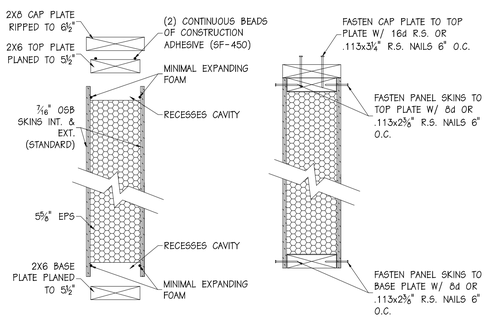

2/C3 – WALL PANEL ASSEMBLY

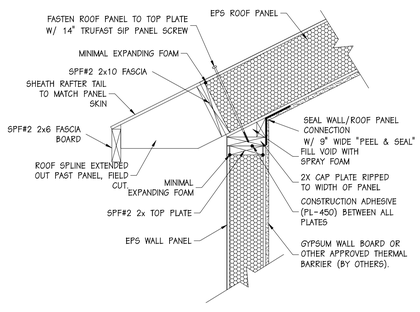

3/C3 – EAVE DETAIL

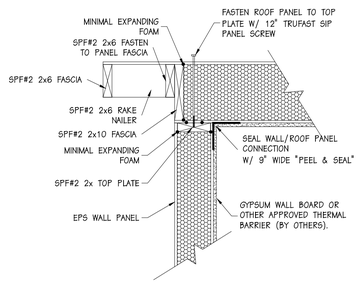

4/C3 – ENDWALL DETAIL

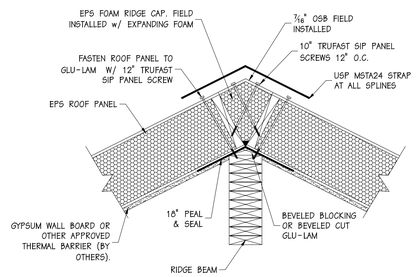

5/C3 – RIDGE DETAIL

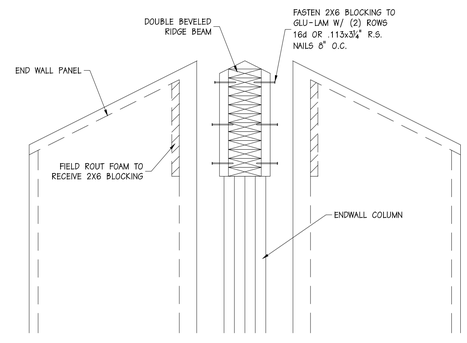

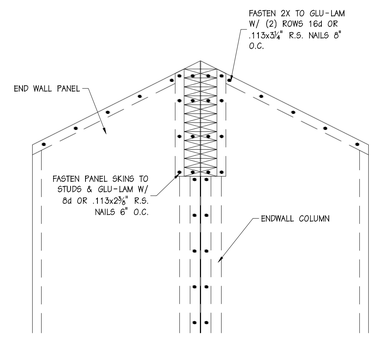

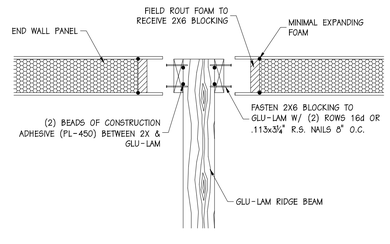

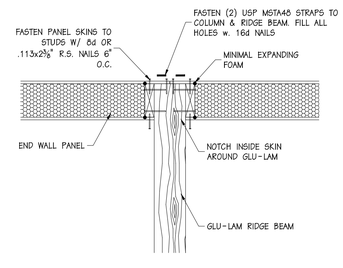

6/C3 – RIDGE BEAM TO COLOUMN DETAIL

ROOF PANEL FASTENING SCHEDULE

COMONENTS	TYPE OF FASTENER	FREQUENCY	SUPPLIED BY
PANEL TO PLATES	12" SIP SCREW LENGTH MAY VARY	6" O.C.	EPS
PANEL TO BEAM	12" SIP SCREW LENGTH MAY VARY	6" O.C.	EPS
PANEL TO LUMBER SPLINE	8d NAILS OR .113x2⅜" R.S.	6" O.C. INT & EXT	EPS
PANEL TO SURFACE SPLINE	8d NAILS OR .113x2⅜" R.S.	6" O.C. INT & EXT	EPS
DOUBLE LUMBER SPLINE	16d NAILS OR 3¼"x.131 R.S.	(3) ROWS 12" O.C.	EPS

ROOF PANEL ADHESIVE SCHEDULE

COMONENTS	TYPE OF ADHESIVE	FREQUENCY	SUPPLIED BY
PERIMETER BOARD	TOUCH-N-SEAL ALL SEASON GUN FOAM	(2) CONTINUOUS BEADS	EPS
SURFACE SPLINES	TOUCH-N-SEAL ALL SEASON GUN FOAM	(1) CONTINUOUS BEAD PER CAVITY	EPS
ROOF PANEL TO WALL TOP PLATE	TOUCH-N-SEAL ALL SEASON GUN FOAM	(2) CONTINUOUS BEADS	EPS

7/C3 – FASTENING SCEDULE

NOTE: WHEN APPLYING ICE & WATER OR "PEEL & SEAL" FOLLOW THE FOLLOWING INSTRUCTIONS TO PREVENT AIR INFILTRATION

1. BE SURE TEMERATURE OF MATERIALS AND AMBIENT TEMPERATURE ARE BOTH ABOVE 50° F.
2. THOROUGHLY CLEAN SURFACES.
3. APPLY SPRAY ADHESIVE PRIMER (BY OTHERS) TO A CLEAN SURFACE.
4. APPLY "PEEL & SEEL" OR ICE & WATER, BE SURE TO APPLY PRESSURE THROUGH OUT MATERIAL TO ENSURE 100% CONTACT.

AN EMPLOYEE-OWNED COMPANY
ENERGY PANEL STRUCTURES
102 EAST INDUSTRIAL PARK
GRAETTINGER, IA 51342
PHONE: 712/859-3219
FAX: 712/859-3275
WWW.EPSBUILDINGS.COM

CRAIGHTON CONSTRUCTION

LEMKE RESIDENCE

SOLID CORE HOUSE PACKAGE

SCALE: NOTED	DATE: 10/25/10	REV. 0	SHEET: C3
DRWN BY: MAB	REVIEWED BY: DMM	REV. 0	
DWG NO. 2010/HOUSE/72523		REV. 0	